CITY OF LANSING
800 1st Terrace
Lansing, KS 66043
913-727-3233 Fax: 913-828-4579
www.lansing.ks.us

WORK SESSION AGENDA

June 2, 2016
Thursday
5:30 p.m.
Lansing City Hall

Call To Order:

I. Wastewater Utility Capital Improvements Program
II. Public Works Capital Improvements Program
III. Capital and Supplemental Requests
IV. Adjournment

WORK SESSION SUMMARY

TO: Tim Vandall, City Administrator

FROM: Sarah Bodensteiner, City Clerk

DATE: May 20, 2016

SUBJECT: Agenda Summary

I. **Wastewater Utility Capital Improvements Program**
- Wastewater Utility Director Tony Zell will be present to answer any questions.

II. **Public Works Capital Improvements Program**
- Public Works Director Jeff Rupp will be present to answer any questions.

III. **Capital and Supplemental Requests**
- Staff will be present to answer any questions regarding requested items.

IV. **Adjournment**

WORKSESSION ITEM

TO: Tim Vandall, City Administrator

FROM: Anthony Zell, Jr., Wastewater Utility Director

DATE: May 19, 2016

SUBJECT: 2016 CIP Presentation

The attached document outlines the Capital Improvement Program through 2020 for the Wastewater Utility Department. The sanitary sewer master plan has identified additional projects that will need to be considered in future years.

There are several elements to this program and several potential funding methods for these improvements. The funding for the majority of the capital projects will require long term financing, whether that comes from the utility's budget or other sources.

In 2016, the utility plans to clean and televise 55,000 feet of pipe in two sub-basins, which have been determined to be high priority areas through the master plan. Future work will include additional cleaning and inspection, as well as dye testing, smoke testing, and manhole rehabilitation.

At the conclusion of the 7 and 9 Mile Creek Action plans, an additional flow study will be conducted to determine the level of inflow and infiltration (I & I) reduction. Based on those results, projects 1 and 2 of the interim relief projects list may or may not be done.

A sanitary sewer evaluation study, programmed for 2020/2021, will help the city in determining what cost effective methods to use for system repair and replacement.

The long term future sewer projects are listed for your review and consideration.

Staff will be available to present this information and answer any questions.

WORKSESSION ITEM

2016 - 2020 Capital Improvement Projects List
Prepared May 2016

Project Description	Programmed Year	Base Budget	G.O. Bonds	Benefit District	Funding Undetermined Probable	Funding Undetermined Necessary	Total Cost
Annual Maintenance	2016	$225,000					$225,000
Annual Maintenance	2017	$231,750					$231,750
Annual Maintenance	2018	$238,703					$238,703
Annual Maintenance	2019	$245,864					$245,864
Annual Maintenance	2020	$253,239					$253,239
Ongoing Capital Projects							
7 Mile Creek Action Plan	2015/2016		$4,324,268				$4,324,268
9 Mile Creek Action Plan	2016/2017		$3,000,000				$3,000,000
Master Plan Recommendations							
I/I Investigation and Reduction							
Flow Metering Study	2017	$65,000					$65,000
San Sewer Eval Study(Basins 1,3,6,8,9)	2020/2021					$350,000	$350,000
System Repairs (based on SSES results)	2020 and beyond				$3,500,000 est.		$3,500,000
Interim Relief Sewer Projects							
Project #1	if needed				$615,000		$615,000
Project #2	if needed				$600,000		$600,000
Project #3	2017 - 2019?					$365,000	$365,000
Project #4	2017 - 2019?					$1,530,000	$1,530,000
					$4,715,000	**$2,245,000**	
					$6,960,000		
Long Term Future Sewer Projects							
Project #6B	?					$3,366,000	$3,366,000
9 Mile Trunk Sewer (54")	?					$2,958,000	$2,958,000
Basin #10 Trunk Sewer	?					$1,020,000	$1,020,000
9 Mile Trunk Sewer (48")	?					$5,865,000	$5,865,000
		$1,259,556	$7,324,268	$0		**$20,169,000**	$28,752,824

WORKSESSION ITEM

TO: Tim Vandall, City Administrator

FROM: Jeff A. Rupp, Director of Public Works

DATE: May 20, 2016

SUBJECT: Public Works Capital Improvements Program

Please find the 2017 requests for Capital Improvements below. The actual budget submissions provided more detailed information.

The 2017 Capital Improvements Program includes the following:

Project Categories	2016	2017
Mill & Overlay (Street Contract)	$600,000	$471,657
Curb Replacement	$38,850	$10,000
Sidewalks	$16,275	$100,000
Drainage Projects/Maintenance	$85,370	$110,000
DeSoto Road Project	$0	$202,550
Total CIP	**$740,495**	**$894,207**

The Mill and Overlay portion of the program has been reduced in scope to allow for rehabilitation of the curbing small piece replacements that usually get left out of funding because of being an isolated small repair.

Additionally, the program has been changed to include a Capital Project for sidewalk extension/connection to existing sidewalk near the elementary school adjacent to Ida Street.

A Stormwater Project is scheduled to be constructed that will correct a serious drainage deficiency at 3rd and Kay. This project budget request is $110,000.

Finally, costs for the engineering/design portion of the DeSoto Road project are also included for 2017. These expenses will most likely carry through to 2018 as well. Staff is waiting on the engineer's estimates to adjust this figure.

Should the council approve the final reimbursement request from KDOT for Gamble Road (86,057.54), this reimbursement would be used to help offset the expenses in the CIP fund, and reduce the transfer needed from the General Fund.

The total 2017 CIP budget request is $894,207.

WORKSESSION ITEM

TO:	Tim Vandall, City Administrator
FROM:	Elizabeth Sanford, Finance Director
DATE:	May 27, 2016
SUBJECT:	C&S Requests

Staff will be available to answer any questions regarding the capital and supplemental requests. Information for all the requests is attached for your review.

The following three funds include C&S Requests:

- **General Fund –** The items requested in this fund will have an impact on the mill levy. Once the estimated assessed valuation is received, staff will provide the council with an estimate of what items can be funded with no mill levy impact.

- **Special Parks & Recreation Fund –** The item requested in this fund would be funded from the fund reserve. The reserve is $266,563 as of January 1, 2016.

- **Wastewater Fund –** The items requested in this fund are included in the projected expenses of the 2015 Wastewater rate study.

Action: Staff is requesting that the council rank each requested C&S item in order of priority on the attached ranking sheet, and return it to staff by the June 16 council meeting. Multiple items requested have been listed separately so that council can choose to fund only one of that item if preferred.

WORKSESSION ITEM # 3

CAPITAL AND SUPPLEMENTAL RANKING SHEET

GENERAL FUND REQUESTS

THESE ITEMS IMPACT THE MILL LEVY

COUNCIL RANKING	DEPT RANK		DEPT/DIV	COST
	1	7.5 TON ROOFTOP AIR CONDITIONER UNIT	CITY CLERK	$8,500
	1	7.5 TON ROOFTOP AIR CONDITIONER UNIT	CITY CLERK	$8,500
	1	2017 POLICE VEHICLE AND PACKAGE	POLICE	$41,500
	1	2017 POLICE VEHICLE AND PACKAGE	POLICE	$41,500
	1	2017 POLICE VEHICLE AND PACKAGE	POLICE	$41,500
	1	2017 POLICE VEHICLE AND PACKAGE	POLICE	$41,500
	2	PATROL OFFICER (includes salary and benefits)	POLICE	$59,055
	3	SIDE BY SIDE 4X4 AND EQUIPMENT	POLICE	$19,000
	1	STRUCTURE REMOVAL COST SHARE	COMM DEV	$30,000
	1	DRAINAGE WORK - 301 IDA ST	PW	$45,000
	2	ROOFTOP AIR CONDITIONER UNIT	PW	$8,000
	2	ROOFTOP AIR CONDITIONER UNIT	PW	$8,000
	2	ROOFTOP AIR CONDITIONER UNIT	PW	$8,000
	1	DURA PATCHER	PW/STR	$65,000
	1	SIDE BY SIDE UTILITY VEHICLE	PARKS/REC	$15,000
	2	FOUNTAINS FOR CENTRE DR DETENTION PONDS	PARKS/REC	$22,000

TOTAL GENERAL FUND REQUESTS **$462,055**

SPECIAL PARKS & REC REQUESTS

THIS ITEM WOULD BE FUNDED FROM THE RESERVE IN THE SPECIAL PARKS & REC FUND

	1	FLAT ROOF REPLACEMENT - ACTIVITY CENTER	SPEC PARKS	$35,000

TOTAL SPECIAL PARKS & REC REQUESTS **$35,000**

WASTEWATER REQUESTS

THESE ITEMS ARE INCLUDED IN THE 2015 WW RATE STUDY

	1	12' SNOW PUSH BOX BLADE FOR TELEHANDLER	WW	$10,000
	2	FULL TIME COLLECTION SYSTEM OPERATOR (Includes salary & benefits)	WW	$53,135

TOTAL WASTEWATER REQUESTS **$63,135**

CAPITAL AND SUPPLEMENTAL
REQUEST FORM
FISCAL YEAR 2017

DEPT/DIV
RANK __1____ **FUNDED: YES ___ NO____**

I. DEPARTMENT/DIVISION:

City Clerk's Office/Building Maintenance

II. DESCRIPTION:

Two (2) 7.5 Ton Commercial Air Conditioner Units

III. WHAT CITY SERVICE WILL THE REQUEST SUPPORT?:

Replacing the old AC Units will service the City Clerk's Office, Finance, Human Resources, and Police Department.

IV. EXPLAIN HOW THE REQUEST WILL IMPROVE THE EFFICIENCY OR EFFECTIVENESS OF THIS CITY SERVICE:

The age of the two existing AC units are quickly approaching 30 years old and with the building being built in 1989 the life expectancy is drawing to an end. As HVAC systems age they become very inefficient and parts availability decreases. These unit are currently operating on R-22 Freon which at this point in time is running $100.00 per lb. The government has put a suspense date for selling R-22 Freon of 2018. After this date R-22 will no longer be produced and the stock that is out there will be all that is left to sell. Due to the age of the AC units they are beginning to show signs of cabinet failure due to the elements, corrosion is taking a toll on the fasteners and over all the components on the exterior and interior. With nearly 30 years difference the improved efficiency will be a big benefit and overall improvement for demands required to air condition the areas that they service.

V. COST: $ 17,000.00

SUPPORTING DOCUMENTATION ATTACHED: Yes

Complete Heating and Air Conditioning, Inc.

Complete Heating & Air Conditioning, Inc.
P.O. Box 622
Tonganoxie, KS 66086

(913) 207-5170
jrh@completeheatingcooling.com
http://www.completehomeheatingac.com

Estimate

Date	Estimate #
03/28/2016	247425
	Exp. Date

Address
City Hall Of Lansing 800 1st Terrace Lansing, KS 66043

Date	Activity	Amount
03/28/2016	Install a 7.5 ton, York, Predator series commercial air conditioner. Unit is 3-phase, and includes hail guards, and a low ambient kit. Also includes matching A-coils, metering devices, and drains.	7,960.00
03/28/2016	1 year parts warranty 5 year compressor warranty	
03/28/2016	crane rental	400.00
	Total	$8,360.00

Please note:
All estimates are void one month after date noted on estimate.

Contact our HVAC professional for updated estimate at :
Complete Home Heating and A/C LLC
913-207-5170

Accepted By

Accepted Date

Predator OD Split System

Split-System Outdoor

Project Name: **Commercial Splits**

Unit Model #: **YC090C00A2AAA4**

Quantity: 1 Tag #: **YC090C00A2AAA4**

System: **YC090C00A2AAA4**

Cooling Performance	
Total capacity	84.6 MBH
Refrigerant type	R-410A
Ambient DB temp.	95.0 °F
Power input (w/o blower)	6.81 kW
Suction pressure	131 psig
Saturated suction temp.	45 °F

Electrical Data	
Power supply	208-3-60
Unit min circuit ampacity	35.5 Amps
Unit max over-current protection	45 Amps

Dimensions & Weight					
Hgt	45 in.	Len	59 in.	Wth	32 in.
Weight with factory installed options					390 lbs.

Clearances					
Right	30 in.	Front	36 in.	Back	24 in.
Top	120 in.	Bottom	0 in.	Left	30 in.

Note: Please refer to the tech guide for listed maximum static pressures

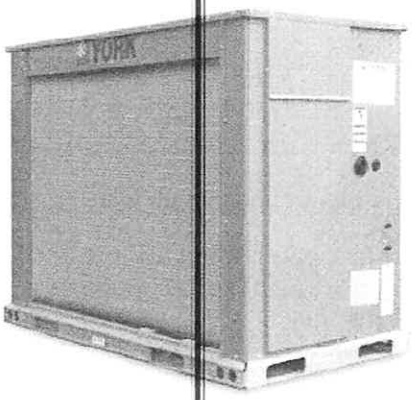

7.5 Ton

- YORK Predator Split System Units are Manufactured at an ISO 9001 Registered Facility.

Unit Features

- Unit Cabinet Constructed of Powder Painted Steel, Certified At 1000 Hours Salt Spray Test (ASTM B-117 Standards)
- Full Perimeter Base Rails with Built in Rigging Capabilities
- Scroll Compressors with Crankcase Heater
- Single Refrigeration Circuit (2 Pipe)
- Liquid Line Driers (Supplied for Field Installation)
- Aluminum Tube/ Aluminum Fin Microchannel Coils
- Back Seating Suction and Liquid Line Service Valves
- Inherently Protected Fan Motors
- Low Ambient to 40°F
- Side or Bottom Single Point Power Connections
- Short Circuit Current: 5kA RMS Symmetrical

Standard Unit Controller: Simplicity Control Board

- Anti-Short Cycle Protection, Lead-Lag, Low Voltage Protection, On-Board Diagnostic and Fault Code Display
- Safety Monitoring - Monitors the High and Low-Pressure Switches. The Unit Control Board will Alarm on Compressor Lockouts and Repeated Limit Switch Trips.

Warranty

- One (1) Year Limited Warranty on All Other Parts
- Five (5) Year Limited Warranty on Compressors

Predator OD Split System

Split-System Outdoor

Project Name: **Commercial Splits**

Unit Model #: **YC090C00A2AAA4**

Quantity: **1** Tag #: **YC090C00A2AAA4**

System: **YC090C00A2AAA4**

Consolidated Drawing

NOTES:
1. FOR OUTDOOR USE ONLY.
2. WEIGHTS SHOWN ARE FOR OPERATING, WITHOUT HAIL GUARDS.
3. MIN. CLEARANCES TO BE:
   RIGHT SIDE: 30 [762]
   LEFT SIDE: 30 [762]
   FRONT: 36 [914]
   REAR: 24 [610]
   TOP: 120 [3048]
   BOTTOM: 0 [0]
4. FOR SMALLER SERVICE AND OPERATIONAL CLEARANCES CONTACT JOHNSON CONTROLS APPLICATION ENGINEERING DEPARTMENT.
5. DIMENSIONS IN [ ] ARE IN MILLIMETERS OR KILOGRAMS.

DIRECTION OF AIRFLOW

CENTER OF GRAVITY

TONNAGE	UNIT	OPERATING WEIGHT (LBS) (BASE UNIT)	CENTER OF GRAVITY LOCATION (BASE UNIT)		4 POINT CORNER LOADS (LBS) (BASE UNIT)			
			X	Y	A	B	C	D
7.5	PC	430 [195]	17.3 [739.4]	33.0 [838.2]	110 [50]	130 [59]	103 [47]	87 [40]
7.5	YC	387 [176]	17.0 [431.8]	32.3 [820.4]	99 [45]	113 [51]	94 [43]	82 [37]

SYSTEM DATA				
	SYSTEM 1		SYSTEM 2	
	SUCTION LINE O.D.	LIQUID LINE O.D.	SUCTION LINE O.D.	LIQUID LINE O.D.
PC	1.125 [28.58]	0.625 [15.88]	N/A	N/A
YC	1.125 [28.58]	0.625 [15.88]	N/A	N/A

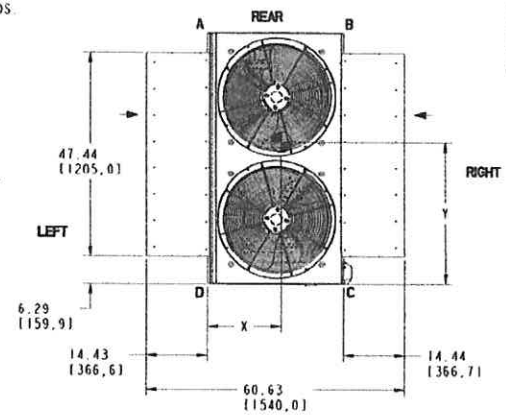

TOP VIEW

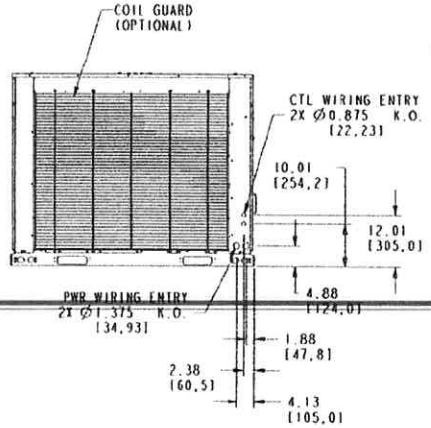

LEFT VIEW
HAIL GUARD NOT SHOWN IN THIS VIEW

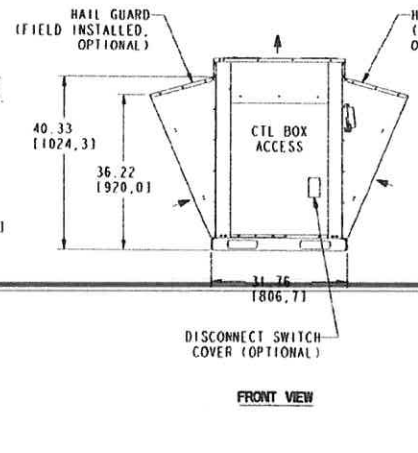

FRONT VIEW

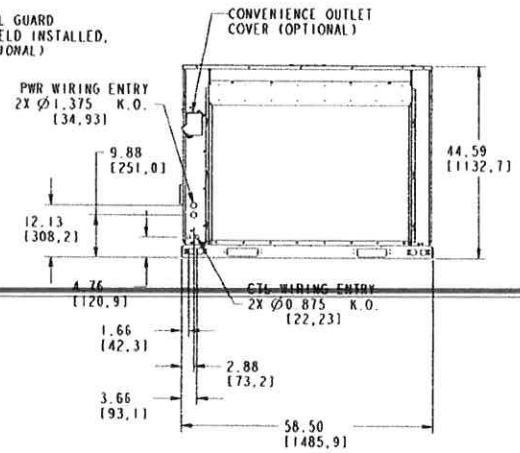

RIGHT VIEW

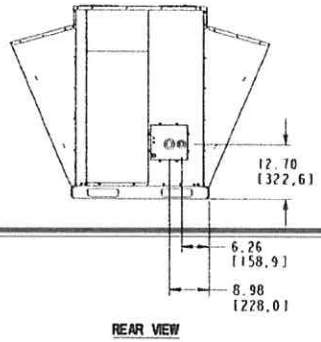

REAR VIEW

DWG NO. UST-PREDOD-20DF45H
PART NO.
SHT NO. 1 OF 1
REV A

CAPITAL AND SUPPLEMENTAL
REQUEST FORM
FISCAL YEAR 2017

DEPT/DIV
RANK 1 FUNDED: YES____NO____

I. DEPARTMENT/DIVISION: **POLICE DEPARTMENT**

II. DESCRIPTION: Four 2017 Police Package replacement vehicles

III. WHAT CITY SERVICE WILL THE REQUEST SUPPORT: The patrol fleet of police vehicles

IV. EXPLAIN HOW THE REQUEST WILL IMPROVE THE EFFICIENCY OR EFFECTIVENESS OF THIS CITY SERVICE: Four older vehicles will be **replaced**. One 2010 vehicle, two 2011 vehicle and one 2012. These are the oldest vehicles in the fleet and require more maintenance, increasing the cost to keep running. These vehicles are also way out of warranty because of age and mileage, meaning that all repairs are paid out of pocket.

V. COST: $ 165,600.00

3 year lease $per year
4 year lease $per year
*This is based on a 3.25% interest rate.

SUPPORTING DOCUMENTATION ATTACHED: YES_X_NO_____

Manufacture/Equipment Desc.	Model	Vendor	Quanty	Unit Cost	Total Cost
Ford/Dodge	Utility/Charger		4	29,000	116,000
LED lightbar		Whelen	4	1400	5600
LED Universal hide-away	LED	Whelen	4	600	2400
Auxilary emergency lights		Whelen	4	500	2000
Siren		Whelen	4	800	3200
Control Box		Whelen	4	900	3600
Setina prisoner transport	Body guard 6/7	Whelen	4	450	1800
Setina Gun Rack	vert rack	Whelen	4	200	800
Setina Gun Lock	Shotgun/rifle	Whelen	4	150	600
Patrol Rifle	AR 15 Patrol rifle		0		
Digital Video system			4	5000	20000
Jotto Desk radio consule	15" Large	Whelen	4	500	2000
Traffic Radar			2	3200	6400
Graphics	graphics		4	400	1600
Total				**43100**	**166,000**

CAPITAL AND SUPPLEMENTAL
REQUEST FORM
FISCAL YEAR 2017

DEPT/DIV
RANK 2 **FUNDED: YES ___ NO___**

I. DEPARTMENT/DIVISION: **POLICE DEPARTMENT**

II. DESCRIPTION: **One (1) Patrol Officer**

III. WHAT CITY SERVICE WILL THE REQUEST SUPPORT?:
This position will increase the patrol division and bring the total number of officer for the police department to 19. This position will help fill shift gaps, due to officers being deployed for military duty, vacations, and training events that officers have to attend to maintain state certification.

IV. EXPLAIN HOW THE REQUEST WILL IMPROVE THE EFFICIENCY OR EFFECTIVENESS OF THIS CITY SERVICE:
With the addition of additional personal to the patrol division both the efficiency and the effectiveness of the police department will be increased. The increase to patrol will also increase ability to respond to critical incidents that could occur at any one of the schools. The response time to calls for assistance should be decreased and the visible presence of additional officers will improve the effectiveness of the department. One of the position is a reinstatement the other is an addition to the staff. With vacation, sick leave usage, and military duty for a couple of officers we are able to staff shifts, but the reduction in manpower has reduced our effectiveness with as a police department.

IV. COST: **$_TBD_for Salary**
$_TBD_for Benefits

$_TBD_total cost for One (1) Officer

SUPPORTING DOCUMENTATION ATTACHED: No

CAPITAL AND SUPPLEMENTAL
REQUEST FORM
FISCAL YEAR 2017

DEPT/DIV
RANK 3 FUNDED: YES____NO____

I. DEPARTMENT/DIVISION: **POLICE DEPARTMENT**

II. DESCRIPTION: 2017 Side by Side 4 x 4 and equipment

III. WHAT CITY SERVICE WILL THE REQUEST SUPPORT: This will support the patrol division with patrol and medical emergencies at events and activities within the city.

IV. EXPLAIN HOW THE REQUEST WILL IMPROVE THE EFFICIENCY OR EFFECTIVENESS OF THIS CITY SERVICE: With the development of the city trail system beginning the police department is requesting a utility vehicle to allow the police department to patrol the trail system. This vehicle will also be equipped to handle medical situations that may occur on the trail system. Will allow the ability to load a patient and transport them to the nearest road for treatment by EMS personnel. This vehicle will also be used at the numerous events within the City of Lansing, Lansing DAZE, Fishing Derby, and the 4th of July.

V. COST: $19,000

SUPPORTING DOCUMENTATION ATTACHED: YES__X__NO_____

2017 4x4 ATV Utility
based on 2015 information

Company	**Kawasaki**	**Polaris**	**Yamaha**	**Kubota**
Model	Mule	Crew	Viking FI	RTV1140
Engine	993cc Diesel	875cc Gas	686cc Gas	3 cyc Diesel
Cargo Capacity	350 lbs/1000lbs	1750 1bs total	600 lbs	1609 lbs
Cost	$15,900.00	$16,500.00	$14,999.00	$15,500.00

CAPITAL AND SUPPLEMENTAL
REQUEST FORM
FISCAL YEAR 2017

DEPT/DIV RANK [i]

FUNDED: YES: [ ] **NO:** [ ]

I. DEPARTMENT/DIVISION:

Community & Economic Development

II. DESCRIPTION:

Structure Removal Cost-Share: Currently, the department has $10,000 budgeted for FY16 in line item number 10-017-41405 (Structure Removal, Community Development) to cover city-initiated structure removal. The department has again included $10,000 in the base budget request for FY17. This C&S Request is to increase this line item by an additional $30,000 for a total of $40,000 for structure removal to allow for the creation of a cost-share program that would provide matching funds to assist owners with demolition costs.

III. WHAT CITY SERVICE WILL THE REQUEST SUPPORT:

Removal of vacant, blighted, and unsafe buildings and improving neighborhood safety and aesthetics.

IV. EXPLAIN HOW THE REQUEST WILL IMPROVE THE EFFICIENCY OR EFFECTIVENESS OF THIS CITY SERVICE:

The cost-share program would improve effectiveness for the following reasons:

- The average cost for demolition of a single family dwelling is $8-10,000 per structure. The current budget of $10,000 would cover approximately one dwelling.
- Staff estimates approximately 10-12 severely dilapidated and unsafe structures exist within the city limits and would be possible candidates for demolition.
- There are two types of demolitions:
  - City-initiated where an owner is deceased and/or the owner cannot be found or is not taking responsibility. In this situation, staff and legal counsel have considerable time and expense in acquiring search warrants, assessing the condition and condemning the property, handling utility disconnects, publishing public notices, holding public hearings, seeking bids from contractors, etc. The city funds the cost of the demolition out of the structure removal line item and then assesses the costs to the property.
  - Owner-initiated where an owner applies for a demolition permit and handles all aspects of the demolition and hires a contractor. A cost-share program would provide a designated amount (staff recommends $4-5,000) and waiver of the demolition permit fees as matching funds towards the owner's demolition costs. This would be outlined in a policy that would be adopted by the City Council, and the program is an incentive for owners to remove structures and improve neighborhoods.

V. COST: $30,000

SUPPORTING DOCUMENTATION ATTACHED: YES: [ ] **NO:** [X]

CAPITAL AND SUPPLEMENTAL
REQUEST FORM
FISCAL YEAR 2017

DEPT/DIV
RANK **Public Works #1** **FUNDED: YES ☐ NO ☐**

I. **DEPARTMENT/DIVISION:** Public Works

II. **DESCRIPTION:** Engineering services and estimated construction costs for drainage work at 301 Ida Street

III. **WHAT CITY SERVICE WILL THE REQUEST SUPPORT?** Public storm water conveyance

IV. **EXPLAIN HOW THE REQUEST WILL IMPROVE THE EFFICIENCY OR EFFECTIVENESS OF THIS CITY SERVICE:** 1. Preservation of private property; and 2. Increased storm water and corrective erosion control system

V. **COST:** Engineering services - $5,000; Construction Cost - $40,000 ; Total - $45,000

SUPPORTING DOCUMENTATION ATTACHED? YES ☒ NO ☐

CAPITAL AND SUPPLEMENTAL
REQUEST FORM
FISCAL YEAR 2017

DEPT/DIV
RANK **Public Works #2** **FUNDED: YES** ☐ **NO** ☐

I. **DEPARTMENT/DIVISION:** 730 First Terrace Building (Library/Public Works/Community and Economic Development)

II. **DESCRIPTION:** Replace three (3) worn out roof top HVAC units

III. **WHAT CITY SERVICE WILL THE REQUEST SUPPORT?** The service life for these units has expired. Annually, the units require repair and those costs are quickly exceeding the cost of replacement units. This request would support all departments and services located in this building: Public Works, Community and Economic Development, and the Library.

IV. **EXPLAIN HOW THE REQUEST WILL IMPROVE THE EFFICIENCY OR EFFECTIVENESS OF THIS CITY SERVICE:** This project will allow the installation of more energy efficient units, decrease utility bills, and potentially avoid unit by unit emergency replacement costs such as the one in 2013, that would certainly result in a much higher overall expenditure and possibly the disruption of city services.

V. **COST:** $24,000.00 ($8,000.00 each)

SUPPORTING DOCUMENTATION ATTACHED? YES ☒ (cost estimate) **NO** ☐

300 Santa Fe St.
Leavenworth, KS 66048
Leavenworth/Lansing: (913) 682-7000
Basehor/Tonganoxie: (913) 724-4024
Atchison: (913) 367-5014
Platte City/Weston: (816) 431-2630
Kansas City: (913) 772-0434
Fax: (913) 682-7844
www.Besels.com

Jan. 13, 2016

Tim Dossey
City Of Lansing
800 1st Terr.
Lansing, Kansas 66043

rkenton@besels.com
tdossey@lansing.ks.us

Re: Budget Proposal HVAC 730 1st Terr.

Dear Mr. Dossey,

Besel's offers the following proposal to replace 2 ea. York roof top units at the location of 730 1st Terr. in Lansing Kansas.

This proposal includes:

- York model ZF048N10A2AAA roof top units
- Remove and set new equipment on existing curbs.
- Reconnect all gas piping, electrical wiring and condensate drains to the new equipment.
- Includes all crane rental.
- Start up and test for proper operation.

Excluded:

- Does not include new thermostats.
- Manual Outside Air Hood
- Economizers
- Hail guards
- City permits
- Sales tax.

Total installation of equipment and all items listed above:

One Unit	$ 6,410.50	
Two Units At The Same Time	$12,179.95 ÷ 2 = 6089.98 (× 3) =	18,269.94
OPTIONS Available:		
Install Manual Outside Air Hood	$ 156.22 Ea. × 3 =	468.66
Install Factory made hail guards	$ 549.65 Ea. × 3 =	1,648.95
Install Factory matched Economizers	$1,083.86 Ea. × 3 =	3,251.58
Replace thermostats	~~$ 165.55 Ea~~	+
		total $ 23,639.13 est

If you have any questions of if I can be of further service, please contact the undersigned.

Respectfully submitted,

Randy Kenton

Randy Kenton, Sales Manager

CAPITAL AND SUPPLEMENTAL
REQUEST FORM
FISCAL YEAR 2017

DEPT/DIV RANK STREET DIVISION #1

FUNDED: YES: ☐ **NO:** ☐

I. DEPARTMENT/DIVISION:

PUBLIC WORKS/STREET DIVISION

II. DESCRIPTION:

DURAPATCHER

III. WHAT CITY SERVICE WILL THE REQUEST SUPPORT:

THE DURAPATCHER WILL SAVE TIME AND MONEY AND WILL INCREASE THE AMOUNT OF PATCHING WE CAN DO. THIS IS THE NEW WAY OF TAKING CARE OF POTHOLES AND ALLIGATORING ON THE STREETS.

IV. EXPLAIN HOW THE REQUEST WILL IMPROVE THE EFFICIENCY OR EFFECTIVENESS OF THIS CITY SERVICE:

THE DURAPATCHER WILL LET US PATCH WITHOUT DIGGING THE BAD SPOTS OUT. THIS PROCESS HAS THE BACKING OF THE STRATEGIC HIGHWAY RESEARCH PROGRAM.

V. COST: $65,000

SUPPORTING DOCUMENTATION ATTACHED: YES: X **NO:** ☐

Public Works Street Division
Budgetary Requests
Return On Investment (ROI) Justification

Project Request: DuraPatcher	
Department/Division Making Request: Public Works/Street Division	
Capital Cost: $65,000	**Funding Source:** 22-43301 Acquisition New Equipment
Purchase Year: 2017	

	Initial Costs	Year 1	Year 2	Year 3	Year 4	Year 5	Cumulative Costs
Total Costs	$65,000.00						$65,000.00
***Total Benefits**	Return on Investment	$16,800.00	$16,800.00	$16,800.00	$16,800.00	$16,800.00	$84,000.00
Net Present Value							$19,000.00

True Return On Investment(ROI) = Five-year Total Net Value = $19,000 + 5 years' additional machine life-cycle duration and additional continued annual labor savings.

Cost Benefit Analysis (CBA) for Tangible and Intangible Costs and Benefits

***Operational Services:** If these services continued as currently being performed, the cost would be approximately $22,400 annually. If the DuraPatcher was purchased and used for alligator patching, the annual cost would drop by approximately **$16,800.00/yr. because of less labor required.** In five years, the return on investment would bring the net present value to **+ $19,000** and the machine would be **paid in full.** The machine would still render the $16,800 savings annually to the end of the machine's life-cycle (10-15 years). The repair material used in most cases applied properly should add 5-7 years of the life-cycle of pavements.

Customer Service: The Public Works Street Division has identified 33 Program Activities, and the 75% time savings would allow personnel to be shifted to another Activity Task or do more of this particular task. Primarily, the DuraPatcher and sealing product would provide quicker repairs and also provide a longer lasting repair.

Based on Average
10x25x.25 repair

CAPITAL AND SUPPLEMENTAL
REQUEST FORM
FISCAL YEAR 2017

DEPT/DIV RANK 1

FUNDED: YES: ☐ **NO:** ☐

I. DEPARTMENT/DIVISION:

Parks and Recreation

II. DESCRIPTION:

Side by Side Utility Vehicle

III. WHAT CITY SERVICE WILL THE REQUEST SUPPORT:

The Parks and Recreation Department and other departments as needed

IV. EXPLAIN HOW THE REQUEST WILL IMPROVE THE EFFICIENCY OR EFFECTIVENESS OF THIS CITY SERVICE:

This piece of equipment would be very similar to the equipment currently used at the wastewater treatment plant. The utility vehicle would be used in a wide variety of ways to include trail maintenance, sports field preparation, trash removal, and special event transportation. This piece of equipment would be very useful for accessing remote, off road areas for maintenance, like Kelly Grove and Bernard Park.

V. COST: $15,000.00

SUPPORTING DOCUMENTATION ATTACHED: YES: X **NO:** ☐

CAPITAL AND SUPPLEMENTAL
REQUEST FORM
FISCAL YEAR 2017

DEPT/DIV RANK 2

FUNDED: YES: ☐ **NO:** ☐

I. DEPARTMENT/DIVISION:

Parks and Recreation

II. DESCRIPTION:

Fountains for Centre Drive detention ponds - 2

III. WHAT CITY SERVICE WILL THE REQUEST SUPPORT:

The Parks and Recreation Department / Community and Economic Development

IV. EXPLAIN HOW THE REQUEST WILL IMPROVE THE EFFICIENCY OR EFFECTIVENESS OF THIS CITY SERVICE:

These two fountains would replace two of the fountains originally installed in 2003. The last of the remaining fountains originally installed have failed. These fountains are aesthetic and they help to improve water quality by keeping the water circulating.

V. COST: 22,000.00

SUPPORTING DOCUMENTATION ATTACHED: YES: ☐ **NO:** ☐

CAPITAL AND SUPPLEMENTAL
REQUEST FORM
FISCAL YEAR 2017

DEPT/DIV RANK 1

FUNDED: YES: ☐ **NO:** ☐

I. DEPARTMENT/DIVISION:

Parks and Recreation

II. DESCRIPTION:

Flat roof replacement at the Activity Center

III. WHAT CITY SERVICE WILL THE REQUEST SUPPORT:

The Parks and Recreation Department and other departments as needed

IV. EXPLAIN HOW THE REQUEST WILL IMPROVE THE EFFICIENCY OR EFFECTIVENESS OF THIS CITY SERVICE:

We replaced the flat roof on the south end of the gym in late 2015 due to several leaks. This request would replace the remainder of the flat roofs on the building which are all starting to have issues with leaks. The existing surfaces are tar and gravel or roll shingle. I don't believe any of these flat sections have ever been replaced by the city.

V. COST: $35,000.00

SUPPORTING DOCUMENTATION ATTACHED: YES: **NO:** ☐

CAPITAL AND SUPPLEMENTAL
REQUEST FORM
FISCAL YEAR 2017

DEPT/DIV RANK __1__ **FUNDED: YES_____NO_____**

I. DEPARTMENT/DIVISION:

Wastewater Utility Department

II. DESCRIPTION:

Twelve-Foot Snow Push Box Blade for Telehandler

III. WHAT CITY SERVICE WILL THE REQUEST SUPPORT:

This attachment for the telehandler will be used to remove snow from all city owned parking lots.

IV. EXPLAIN HOW THE REQUEST WILL IMPROVE THE EFFICIENCY OR EFFECTIVENESS OF THIS CITY SERVICE:

The Wastewater Utility Department purchased a four-wheel drive telehandler in 2007. An attachment is available for the front boom that will allow much better snow removal at city owned parking lots. These locations include City Hall, Community Center, Municipal Services Building, Activity Center, Library, Public Works, Street Department, and the Wastewater Treatment Facility.

A box blade is used by commercial contractors for clearing snow and ice from large parking areas due to its ease of use and minimal effort. The traditional method in use by the city requires a truck to windrow the snow and continue to move in parallel lines to move snow across an area. This operation requires the driver to back up many more times than necessary, which results in increased labor cost for snow removal, increased wear and tear on the aging vehicle fleet, and exposes the operator to additional opportunities for an accident. Further, navigation around obstacles presents the driver with operational difficulties in locating proper areas for snow deposition.

A box blade pushes all the snow in a swath as wide as the box, and contains that snow as the vehicle passes over the area. The snow is then pushed into a pile without the need for windrowing. It is estimated that this method is at least fifty percent more efficient than the traditional method. The unit will be operated by Wastewater Department staff to clean the Wastewater Treatment Facility, and then in support emergency snow removal operations.

V. COST: $10,000

SUPPORTING DOCUMENTATION ATTACHED: YES

CAPITAL AND SUPPLEMENTAL
REQUEST FORM
FISCAL YEAR 2017

DEPT/DIV RANK __2___ **FUNDED: YES_____NO_____**

I. DEPARTMENT/DIVISION:

Wastewater Utility Department / Collection System Division

II. DESCRIPTION:

Full Time Collection System Operator

III. WHAT CITY SERVICE WILL THE REQUEST SUPPORT:

The employee will work full time in the collection system division.

IV. EXPLAIN HOW THE REQUEST WILL IMPROVE THE EFFICIENCY OR EFFECTIVENESS OF THIS CITY SERVICE:

The Wastewater Utility Department currently has only one employee that it has dedicated to the maintenance of the wastewater collection system and the field work required for sanitary sewer locates. On average, this department processes around 120 locate requests a month, which is equivalent to five per workday. Currently, the sole employee in this division is responsible for marking these facilities, which leaves little time for other essential functions, which include manhole condition assessment, pretreatment facility inspection, grease trap inspections, interim capital project inspections, and coordination of collection system repairs and rehabilitation.

V. COST: Wages $35,346 + Benefits $17,789 = $53,135

SUPPORTING DOCUMENTATION ATTACHED: YES